K - HK

SINGLE IMPELLER PUMPS

K 5

HK 75

CE

Single impeller centrifugal pump designed for domestic, civil, industrial and agricultural installations and for decanting, mixing and irrigating uses.
Cast iron pump body and motor support.
Technopolymer or cast iron impeller as indicated in the TECHNICAL DATA table.
Stainless steel driving shaft. Carbon/ceramic mechanical seal.
Asynchronous, closed motor, cooled by external ventilation. Built-in thermal and current overload protection and a capacitor permanently on in the single-phase version. For the protection of the three-phase motor it is advisable to use a suitable overload protection complying with the regulations in force.
Operating range: from 1.8 to 96 m^3/h with head up to 62 metres.
Pumped liquid characteristics:clean, free from solids or abrasive substances, not viscous, not aggressive, not crystallised, chemically neutral and close to the characteristics of water.

Liquid temperature range: from -10°C to +50°C for K 5, K 8, K 15, HK 10, K 31, K 41 from -15°C to +110°C for other pumps
Maximum ambient temperature: +40°C
Maximum operating pressure:

K 5, K 8, HK 10, HK 25:	6 bar (600 kPa)
K 31, K 41, K 56, HK 40, HK 55:	8 bar (800 kPa)
HK 75, HK 100, HK 101, HK 125, HK 150, HK 102, HK 126, HK 151:	10 bar (1000 kPa)

Protection level: IP 44
Terminal board protection level: IP 55
Insulation class: F

TECHNICAL DATA

MODEL	ELECTRICAL DATA						
	VOLTAGE 50 Hz	P1 MAX kW	P2 NOMINAL kW	P2 NOMINAL HP	In A	CAPACITOR µF	CAPACITOR Vc
K 5 M	1x220-240 V ~	0,65	0,37	0,5	3	10	450
K 5 T	3x230-400 V ~	0,64	0,37	0,5	2,3-1,3	–	–
K 8 M	1x220-240 V ~	1,3	0,75	1	6	20	450
K 8 T	3x230-400 V ~	1,2	0,75	1	4,3-2,5	–	–
K 31 T	3x230-400 V ~	3	2,2	3	9-5,2	–	–
K 41 T	3x230-400 V ~	3,5	3	4	11,1-6,4	–	–
K 56 T	3x230-400 V ~	4,9	4	5,5	16,3-9,4	40	–
HK 10 M	1x220-240 V ~	1,05	0,75	1	4,6	20	450
HK 10 T	3x230-400 V ~	1,02	0,75	1	3,6-2,1	–	–
HK 25 M	1x220-240 V ~	2,1	1,85	2,5	9,5	–	450
HK 25 T	3x230-400 V ~	2,1	1,85	2,5	7,4	–	–
HK 40 T	3x230-400 V ~	3,4	3	4	10,2-5,9	–	–
HK 55 T	3x230-400 V ~	4,5	4	5,5	14,7-8,5	–	–
HK 75 T	3x400 V ~ Δ*	7	5,5	7,5	11,5	–	–
HK 100 T	3x400 V ~ Δ*	9,4	7,5	10	15	–	–
HK 101 T	3x400 V ~ Δ*	8,3	7,5	10	14	–	–
HK 125 T	3x400 V ~ Δ*	11	9,2	12,5	18	–	–
HK 150 T	3x400 V ~ Δ*	12,75	11	15	20,5	–	–
HK 102 T	3x400 V ~ Δ*	8,9	7,5	10	15,4	–	–
HK 126 T	3x400 V ~ Δ*	10	9,2	12,5	18	–	–
HK 151 T	3x400 V ~ Δ*	11,4	11	15	19,3	–	–

* Star (⅄) starting is possible

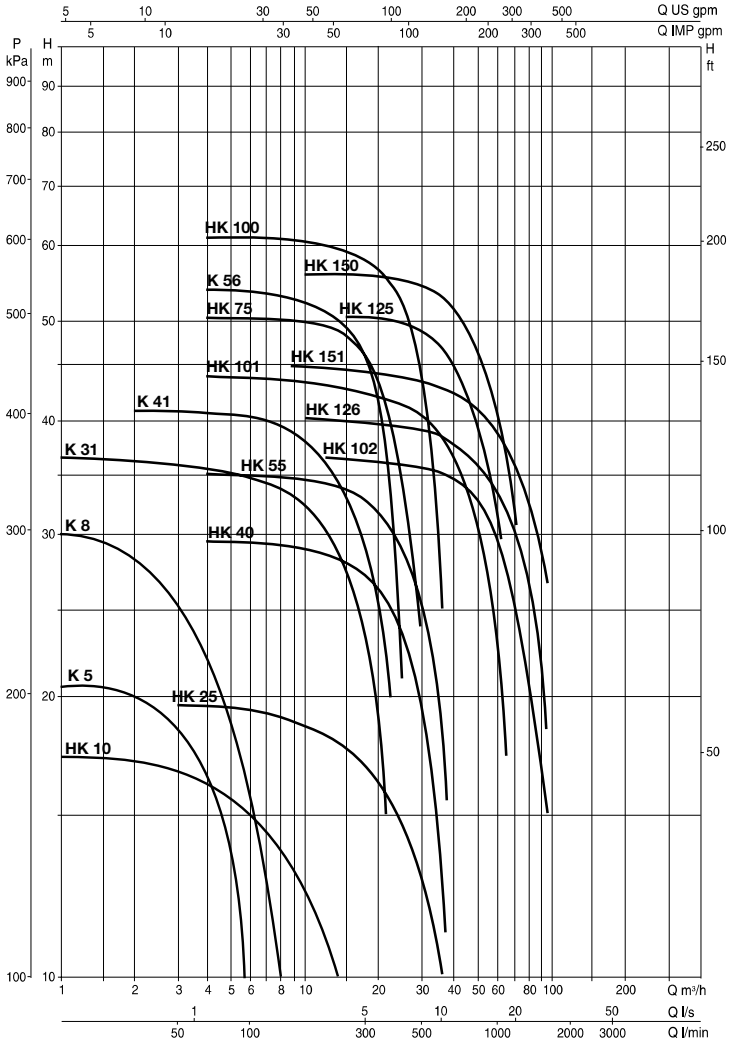

saci pumps

DIMENSIONS AND WEIGHTS

K5 - K8 - HK10

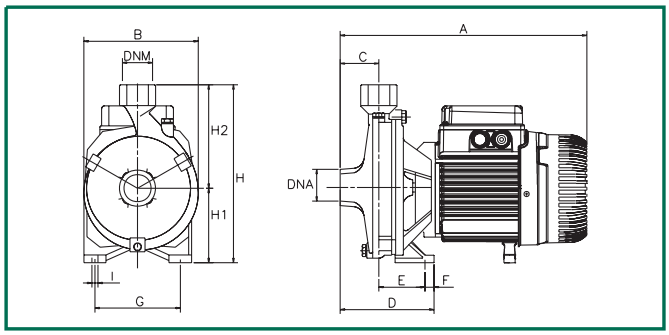

K31 - K41 - K56
HK25 - HK40 - HK55

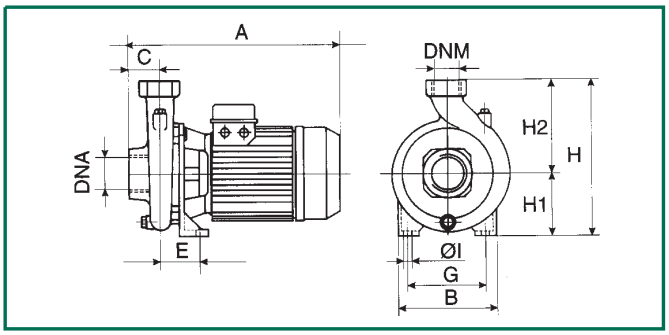

HK75 - HK100 - HK101 - HK125 - HK150
HK102 - HK126 - HK151

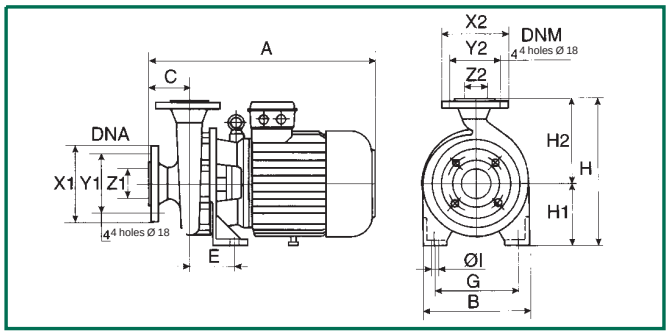

MODEL	A	B	C	D	E	G	Ø I	H	H1	DNA	DNM	WEIGHT Kg
K 5	275	160	50	100	50	110	9	205	85	1" G	1" G	10
K 8	300	185	50	108	58	140	9	235	100	1" G	1" G	14,5
K 31	425	250	55	–	86	175	14	320	135	2" G	1 1/4" G	32,1
K 41	425	250	55	–	86	175	14	320	135	2" G	1 1/4" G	33,9
K 56	425	250	55	–	86	175	14	320	135	2" G	1 1/4" G	33,9
HK 10	312	169	45	114	69	110	9	218	85	1 1/2" G	1 1/2" G	13,8
HK 25 M	430	200	62	–	74	120	11	270	105	2" G	2" G	24,5
HK 25 T	358	200	62	–	74	120	11	270	105	2" G	2" G	22
HK 40	440	240	62	–	100	155	14	312	132	2 1/2" G	2" G	35,6
HK 55	440	240	62	–	100	155	14	312	132	2 1/2" G	2" G	39,6
HK 75	560	273	100	–	110	212	14	360	160	65	50	78,8
HK 100	560	273	100	–	110	212	14	360	160	65	50	78,8
HK 101	600	273	100	–	110	212	14	385	160	80	65	90,2
HK 125	600	273	100	–	110	212	14	385	160	80	65	95
HK 150	600	273	100	–	110	212	14	385	160	80	65	104,3
HK 102	600	273	100	–	110	212	14	385	160	80	65	88
HK 126	600	273	100	–	110	212	14	385	160	80	65	94
HK 151	600	273	100	–	110	212	14	385	160	80	65	100